Datasheet FG-001AI

IP65 control valve for gas flow applications

> Introduction

Bronkhorst designed the control valve model FG-001AI for gas flow applications with low flow rates and pressure rating up to 64 bar. This control valve is directly operated by a magnetic coil with IP65 (weatherproof) housing and is closed when de-energized (Normally Closed). Depending on flow rate and fluid the FG-001AI valve allows a pressure drop of max. 4 to 40 bar (d). Together with Bronkhorst mass flow meters it offers possibilities to constitute a compact flow or pressure control loop.

> Technical specifications

Operating conditions

Max. pressure	: 64 bar g
Operating temperature	: 10…+70°C

Mechanical parts

Material (wetted parts)	: stainless steel 316L or comparable
Process connections	: compression type or face seal male
Seals / Plunger, standard	: Viton/FKM with Kalrez/FFKM plunger
Leak integrity, outboard	: 1 ·10^{-9} mbar.l/s He

Electrical specifications

Valve control signal	: 0…185 mA
Coil resistance	: 62 Ohm
Max. power consumption	: 2,7 Watt (15 V · 0,185 A)
Electrical connection	: DIN 43650 connector
Ingress protection	: IP65

Kv-values vs Max. ΔP

Kv-value (up to)	Orifice size (mm)	Coil type	ΔP max* (bar d)
4,3.10-5	0,05	IIU	40
8,4.10-5	0,07	IIU	30
1,7.10-4	0,10	IIU	30
3,3.10-4	0,14	IIU	30
6,9.10-4	0,20	IIU	30
1,5.10-3	0,30	IIU	30
2,3.10-3	0,37	IIU	30
4,3.10-3	0,5	IIU	30
8,4.10-3	0,7	IIU	24
1,7.10-2	1,0	IIU	12
2,9.10-2	1,3	IIU	8
3,9.10-2	1,5	IIU	6
5,0.10-2	1,7	IIU	5
6,6.10-2	2,0	IIU	4

* depending on flow rate (based on air)

Control Valve model FG-001AI

> Dimensions (mm) and weight (kg)

Weight: 0,4 kg

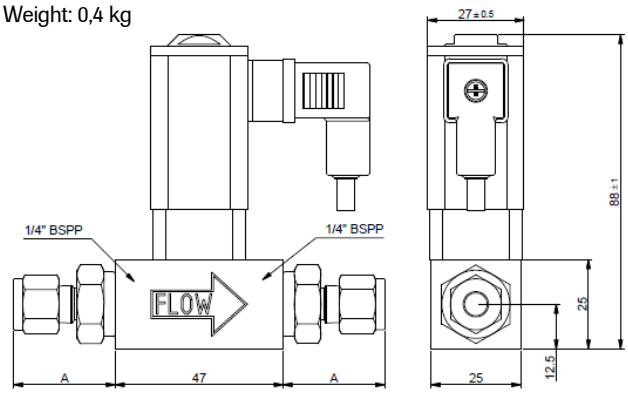

Compression type	3/8" tube A
adapter 3mm OD	18.0mm
adapter 6mm OD	18.9mm
adapter 8mm OD	26.6mm
adapter 10mm OD	39.7mm
adapter 12mm OD	42.4mm
adapter 1/16" OD	15.6mm
adapter 1/8" OD	17.5mm
adapter 1/4" OD	18.9mm
adapter 3/8" OD	26.4mm
adapter 1/2" OD	42.2mm

Face-seal male	3/8" tube A
adapter 1/8" inlet	13.7mm
adapter 1/4" inlet	17.6mm
adapter 1/2" inlet	37.6mm

NOTE: Although all specifications in this datasheet are believed to be accurate, the right is reserved to make changes without notice or obligation.

Bronkhorst®

Nijverheidsstraat 1a, NL-7261 AK Ruurlo The Netherlands
T +31 (0)573 45 88 00 I www.bronkhorst.com E info@bronkhorst.com

E.DS.FG-001AI.0925.A

Model number identification

FG – N N N A I – AAA – NN – A

Base

0	Valve only

Pressure rating

0	64 bar

Style

1AI	Low flow – Industrial style (IP65)

Coil type

IIU	Industrial, 62 Ohm

Connections (in/out)

11	1/8“	OD compression type
22	1/4“	OD compression type
33	6 mm	OD compression type
44	12 mm	OD compression type
55	1/2”	OD compression type
66	20 mm	OD compression type
88	1/4”	Face seal male
99		other

Internal seals

V	Viton/FKM with Kalrez/FFKM plunger (factory standard)
E	EPDM
K	Kalrez (FFKM)